15 lb/day Ozone Remediation Kit

ORK-15 Ozone Generation and Control Kit for Groundwater Remediation Applications

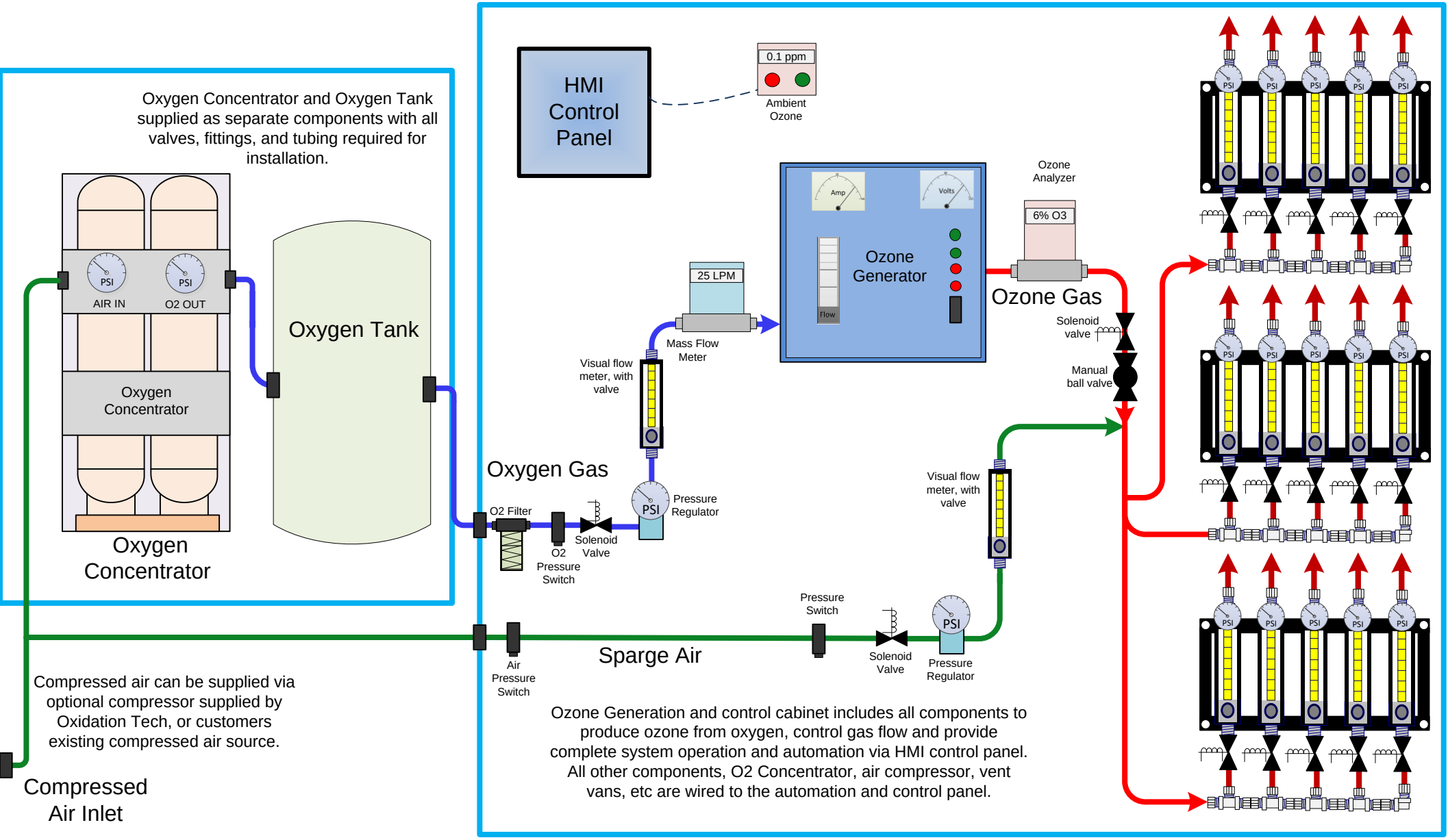

OXIDATION TECHNOLOGIES, LLC.

Complete system is supplied as a kit that can be installed inside a shed, trailer, cargo container, or existing building. All components and tubing for operation are supplied, system is completely plug-and-play.